GUBI

SPECIFICATIONS
V.13.03.24

Coco Bar Chair - Fully Upholstered, 75

OEO Studio - 2016



ITEM NUMBER	60221
DESCRIPTION	The Coco Bar Chair is part of the Coco Collection, designed by OEO Studio with a focus on creating a charismatic signature design that offers a high level of comfort. The bar chair borrows references to the industrial simplicity, fashion and the Bauhaus, but the inspiration of the design comes from a desire to create a simple yet elegant chair with minimal use of materials and tools without compromising the design and character. The result is a post-industrial look that is balanced by an elegant silhouette where the soft curves render a feminine and playful touch. The feminine expression is also what has given the bar chair its name Coco, which is filled with character and carries a lot of references. The Coco Bar Chair has its own unique personality and friendly appearance that makes it blend naturally into various settings from pared-down ambiences to grand and refined universes. The high level of comfort is, among other features, expressed in the backrests curvy shape, that embraces and relieves the back of the one sitting in the bar chair. The design also allows the Coco Bar Chair to be both playful and loud to more sophisticated and elegant, which gives the bar chair an almost human character, makes it highly recognizable, enhances its uniqueness and makes it easy to implement in both private homes as well as restaurants, cafes etc.

Materials & Finishes

BASE FINISH	BLACK (RAL 9005 / Gloss 3-5) - Metal
MATERIALS	Steel, Foam, Fabric or Leather uphostery

Dimensions

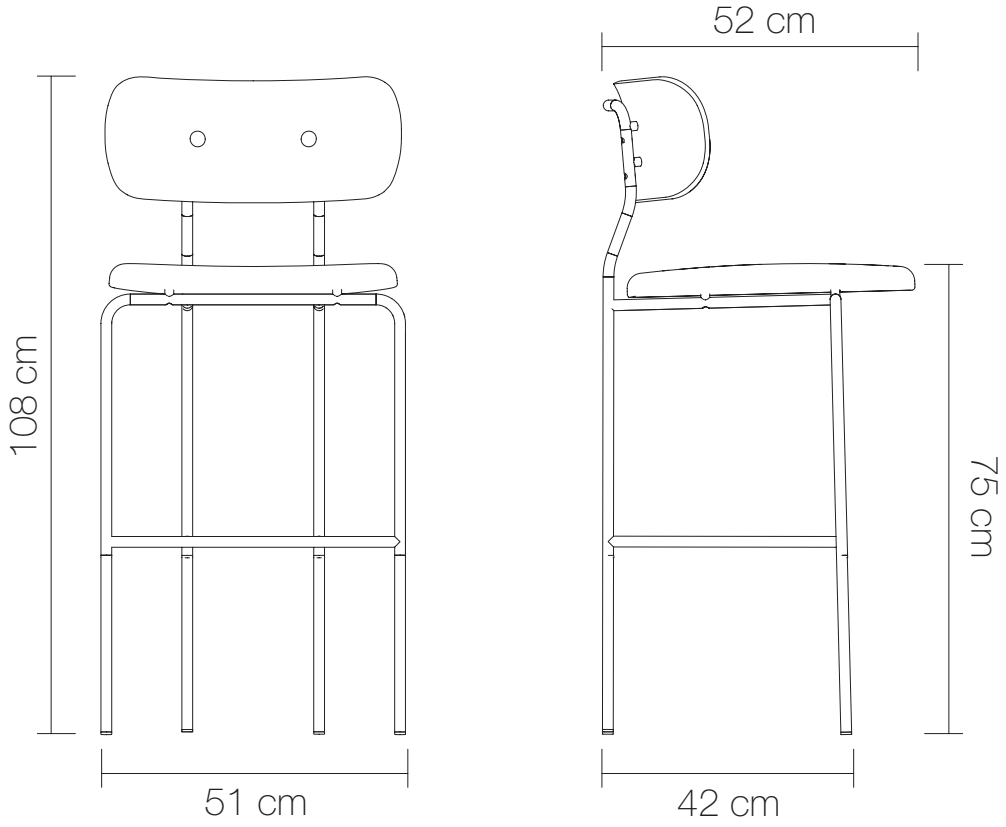

WIDTH	51 cm / 20.07 in
DEPTH	42 cm / 16.53 in
HEIGHT	108 cm / 42.51 in
BACKREST HEIGHT	31 cm / 12.20 in
FOOTREST HEIGHT	33 cm / 12.99 in
SEAT DIAMETER	Ø 48 cm / Ø 18.89 in
FRAME WIDTH	51 cm / 20.07 in
FRAME DEPTH	43 cm / 16.92 in
LEG THICKNESS	1.8 cm / 0.70 in
TOTAL SEATING DIMENSIONS (DxWxH)	52 x 51 x 108 cm / 20.47 x 20.07 x 42.51 in

Weight

TOTAL WEIGHT	7.4 kg / 16.31 lbs

Upholstery Consumption

FABRIC

76 X 140 CM FABRIC WIDTH / 29.92 X 55 IN FABRIC WIDTH

Number of parcels 1

PACKAGING LENGTH	54 cm / 21.25 in
PACKAGING WIDTH	60 cm / 23.62 in
PACKAGING HEIGHT	115 cm / 45.27 in
PACKAGING WEIGHT	3.9 kg / 8.59 lbs
GROSS WEIGHT	11.3 kg / 24.91 lbs

Test & Certifications

CALL117

INTERTEK