Kabino Sideboard

Assembly Instructions

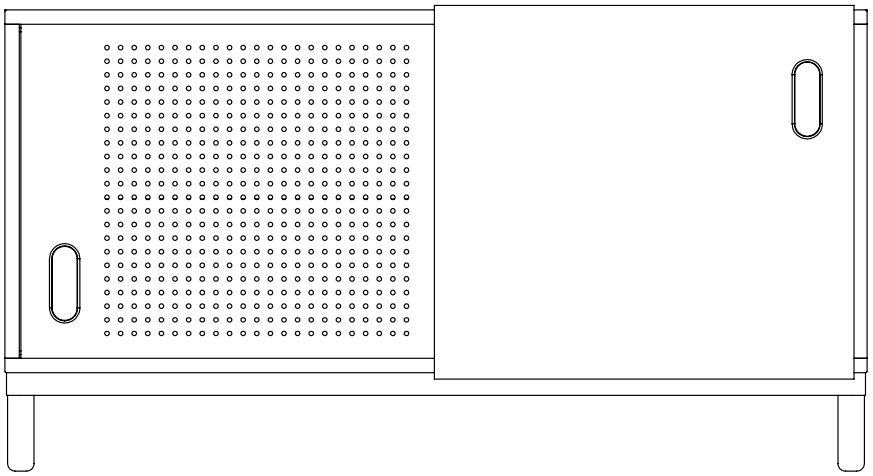

normann

COPENHAGEN

1

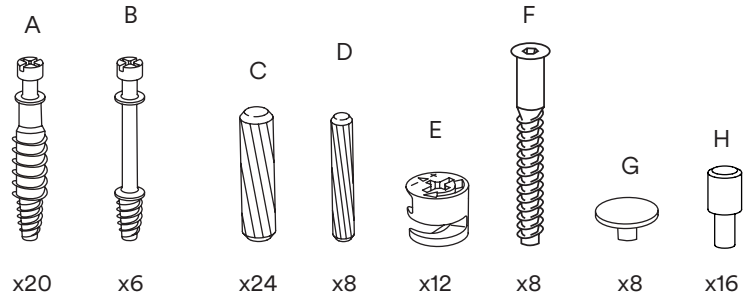

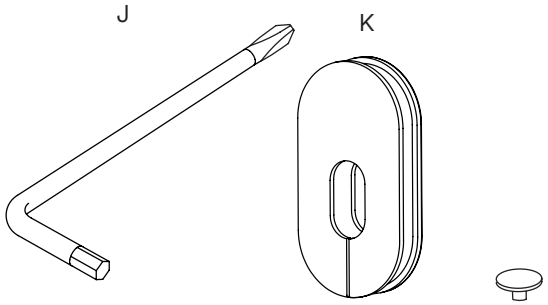

2

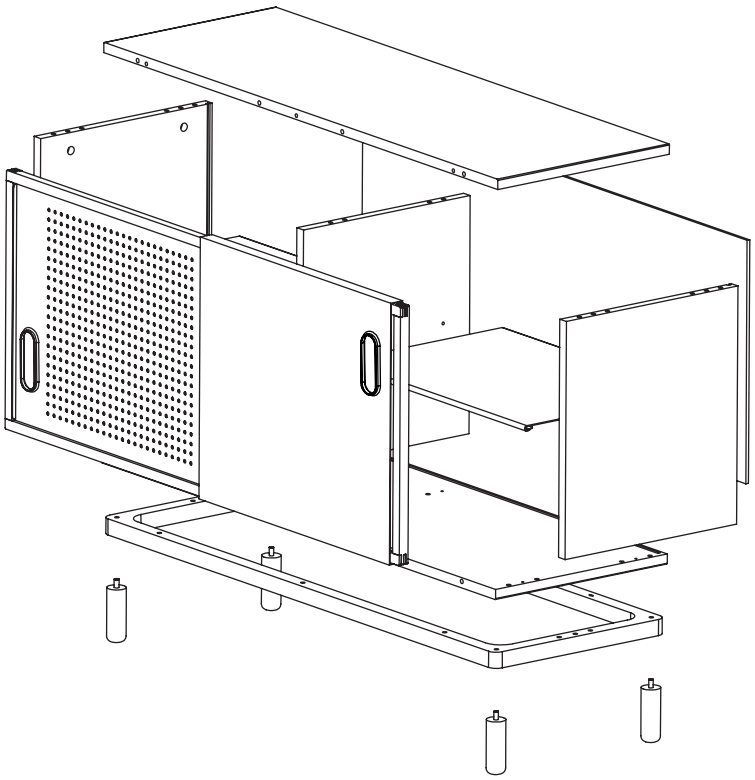

3

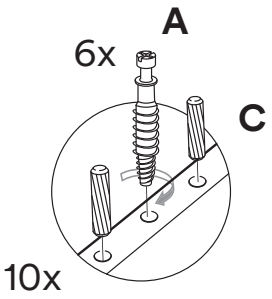

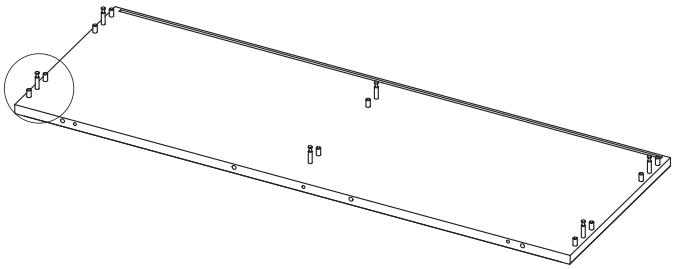

4

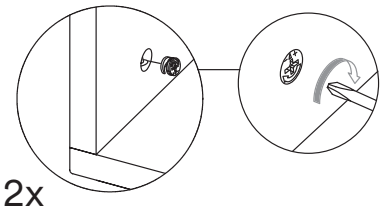

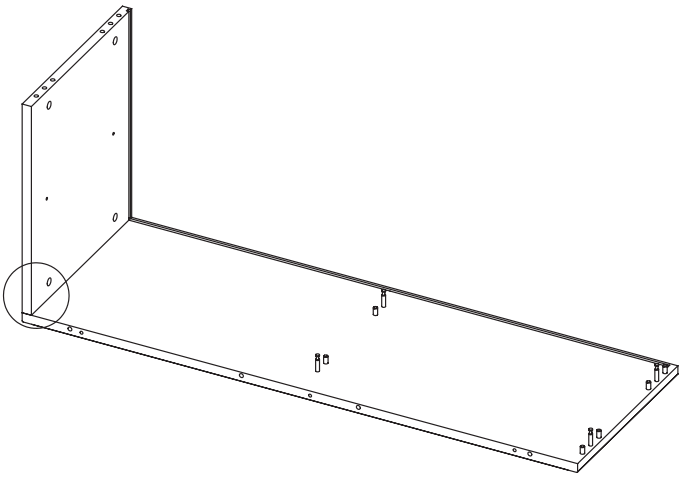

5

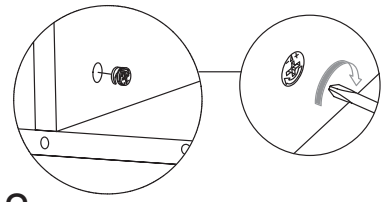

2x

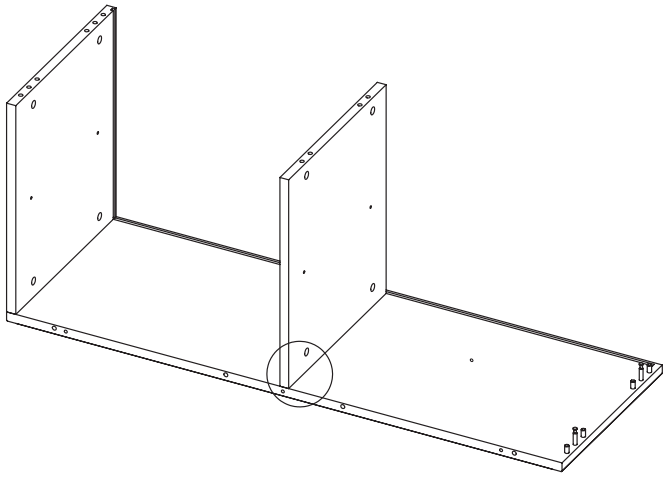

6

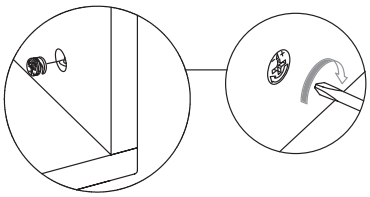

2x

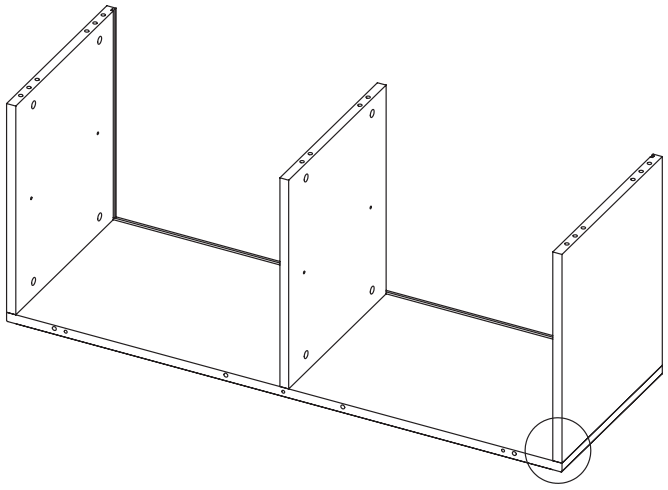

7

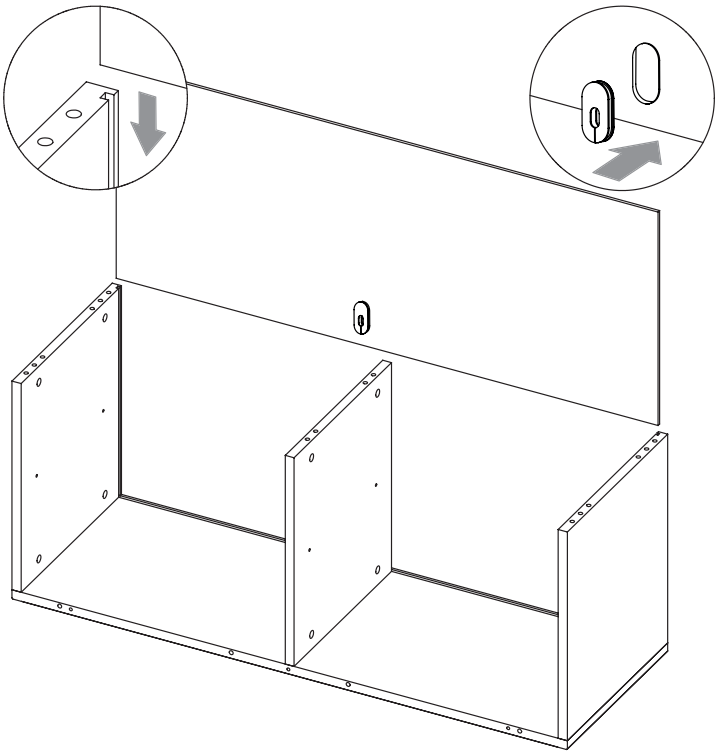

8

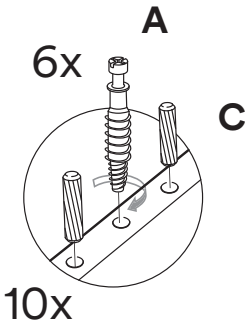

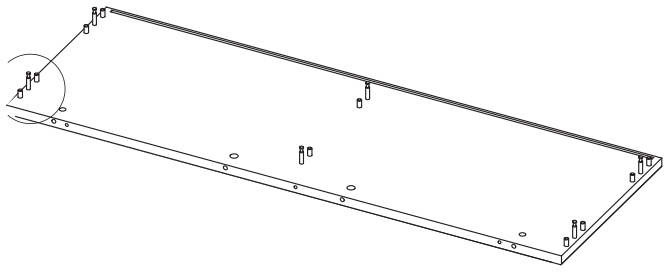

9

6x

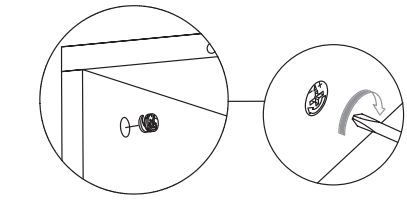

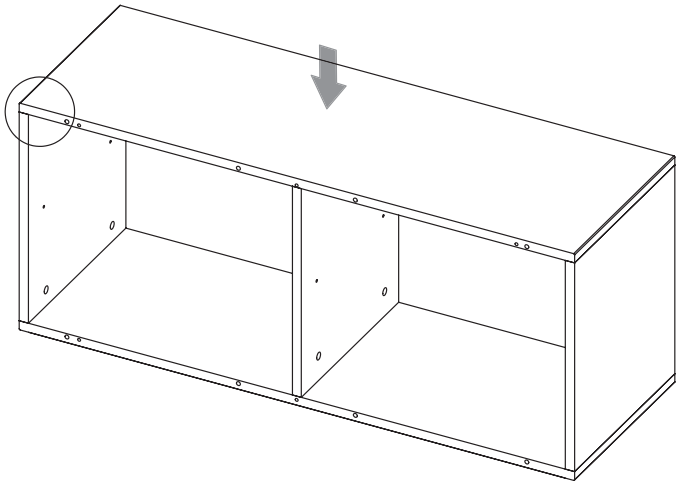

10

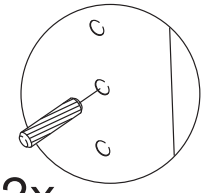

2x

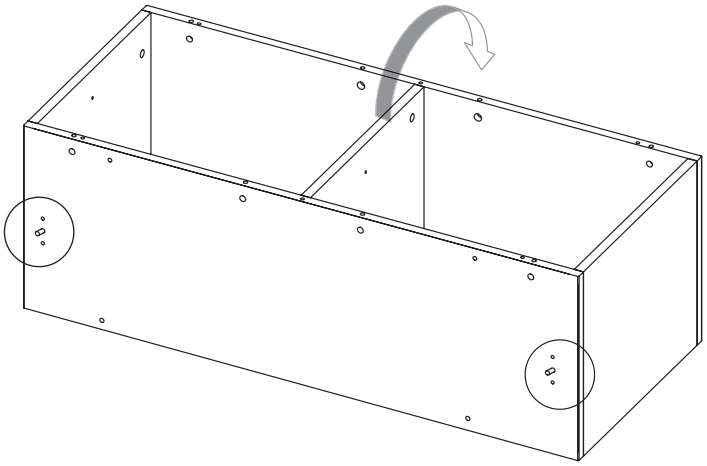

11

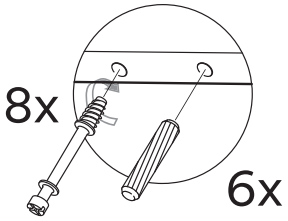

B

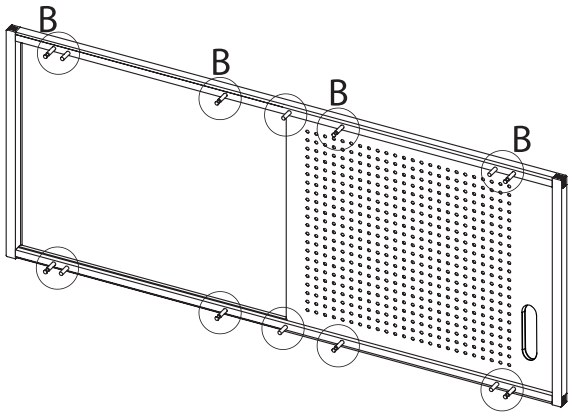

12

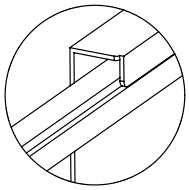

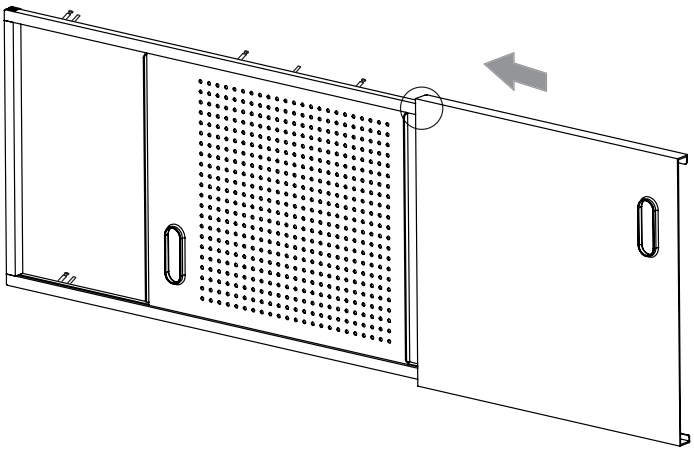

13

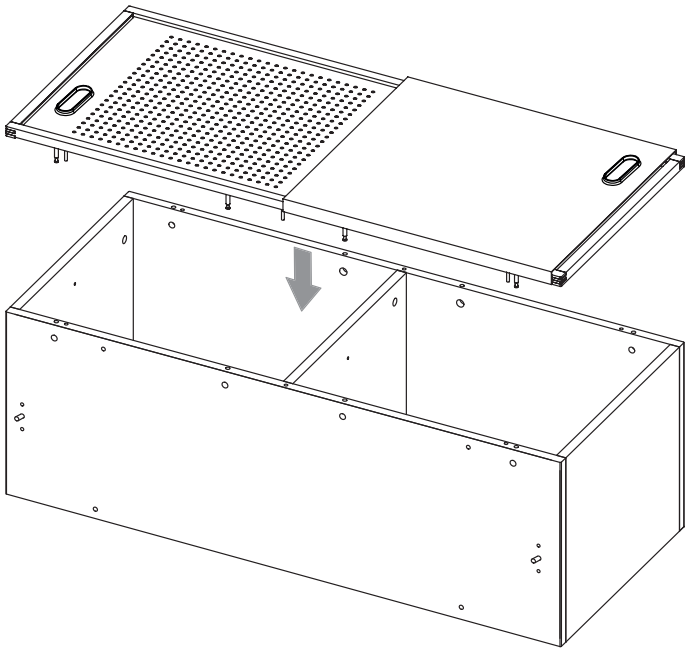

14

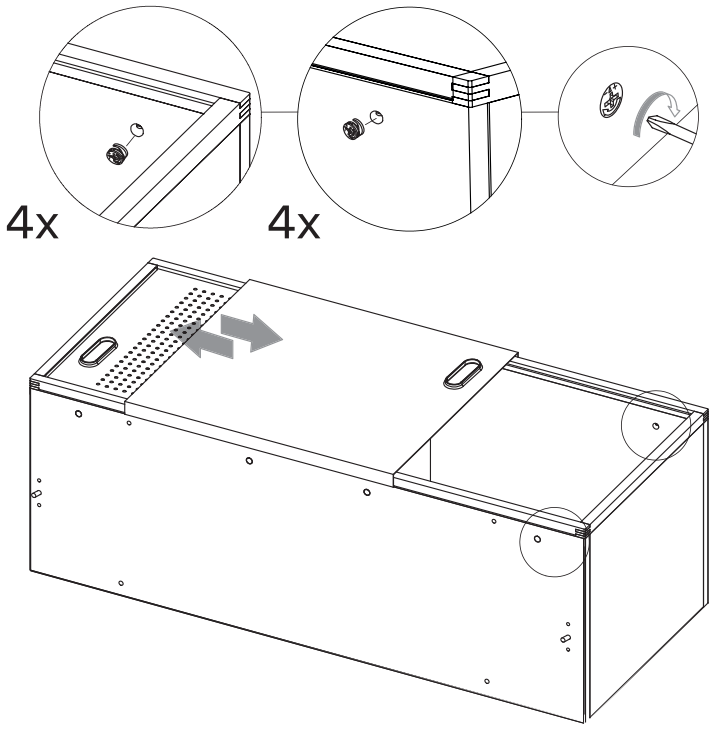

15

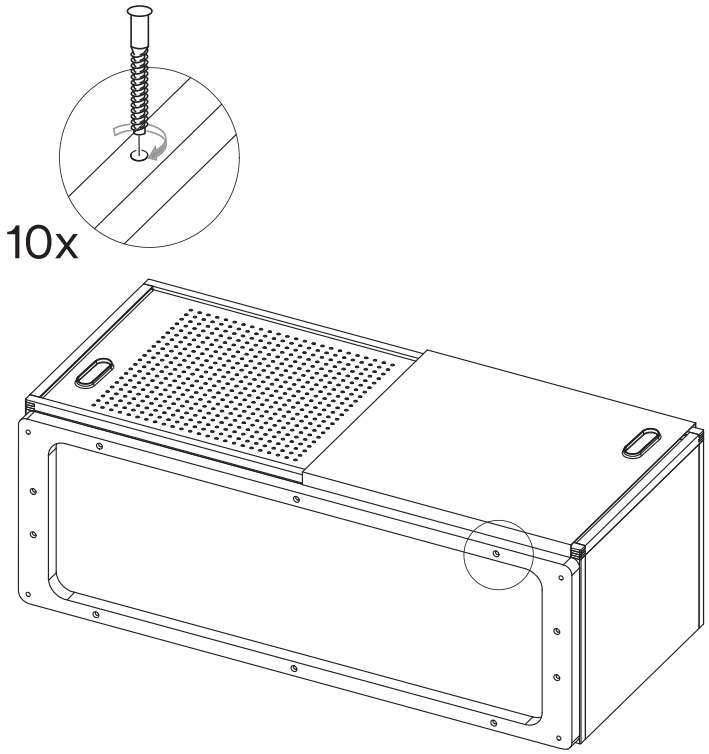

16

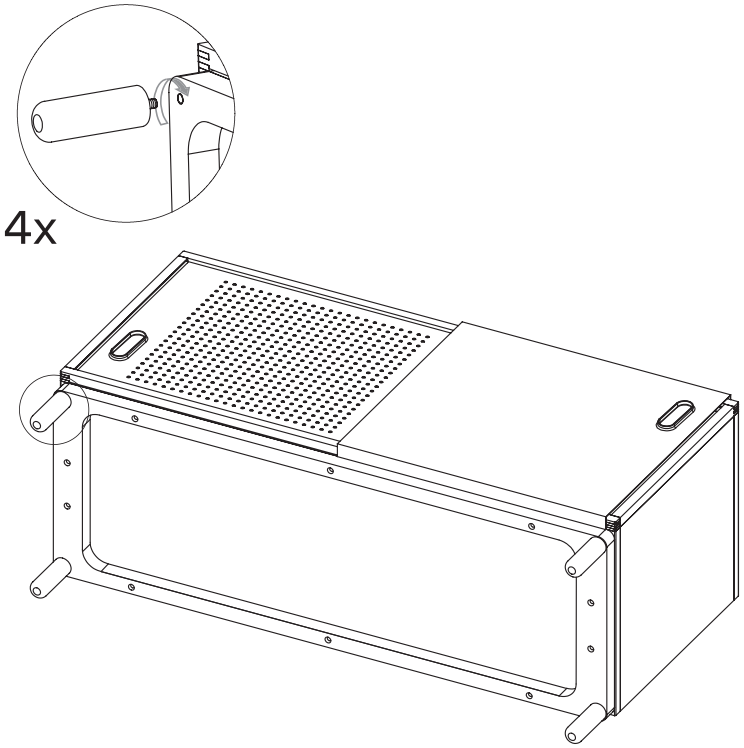

17

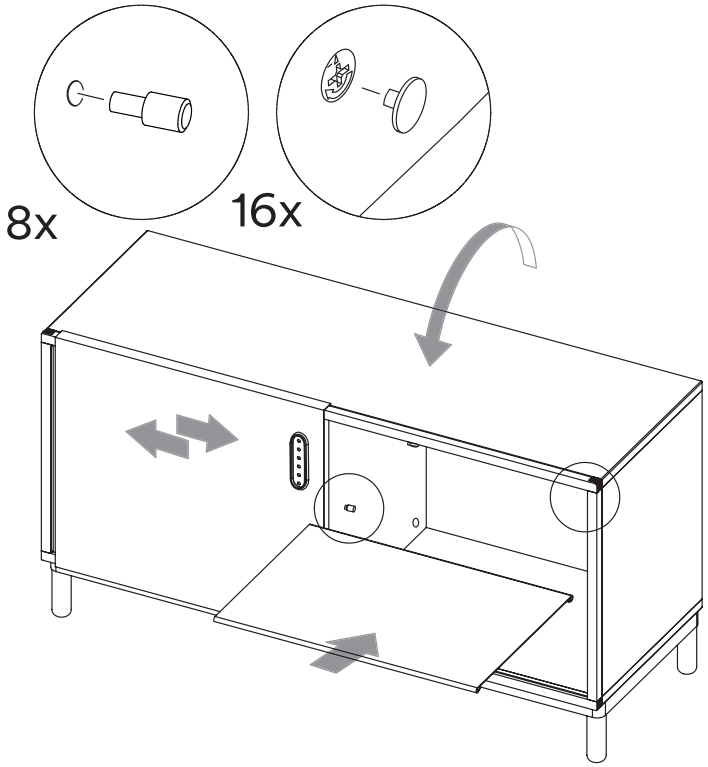

18

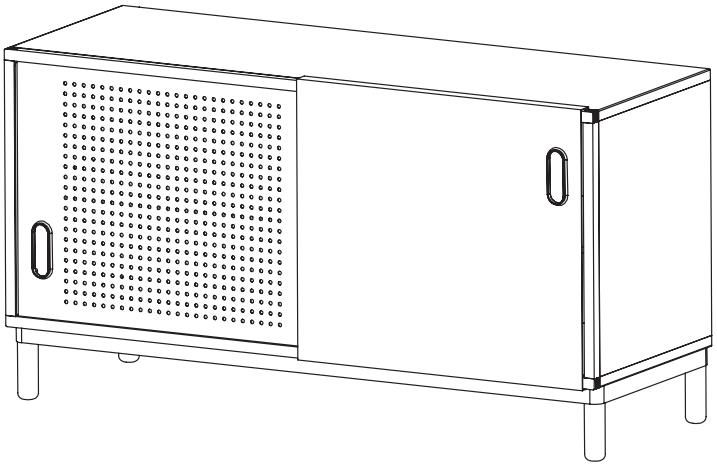

19

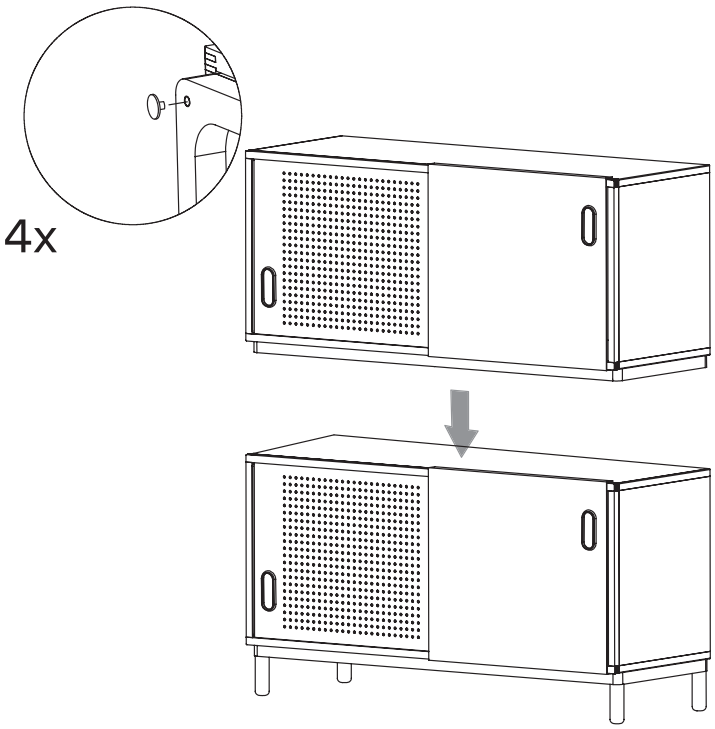

20

